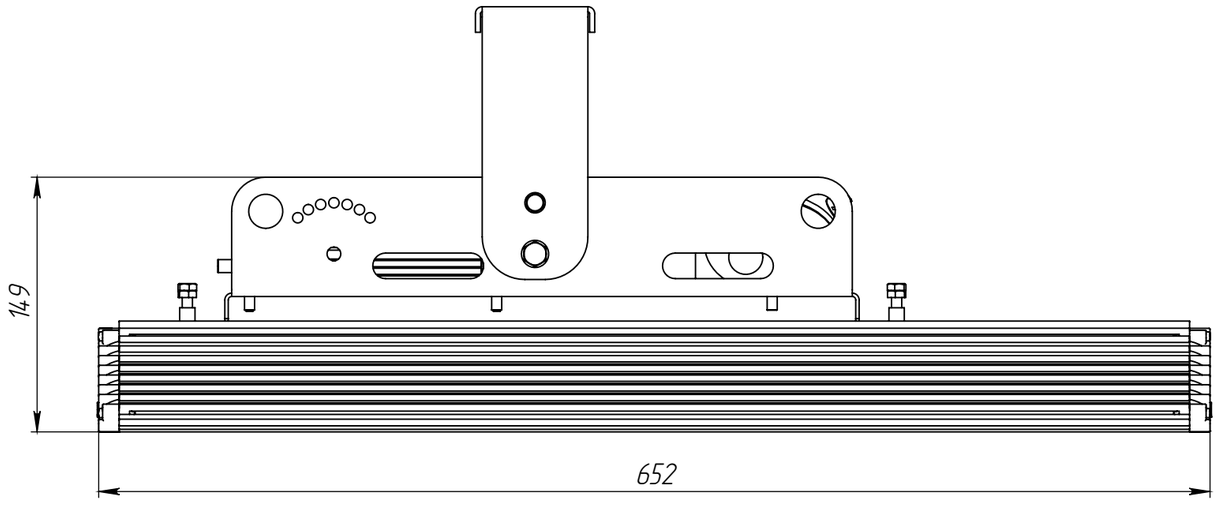
149
652

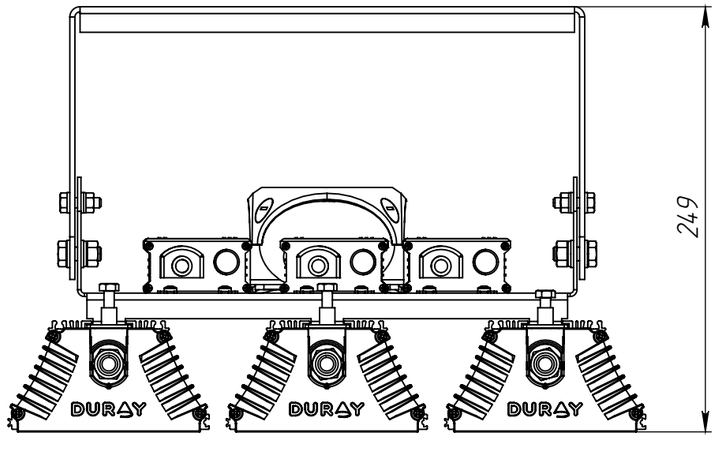
249
DURSY
DURSY
DURSY

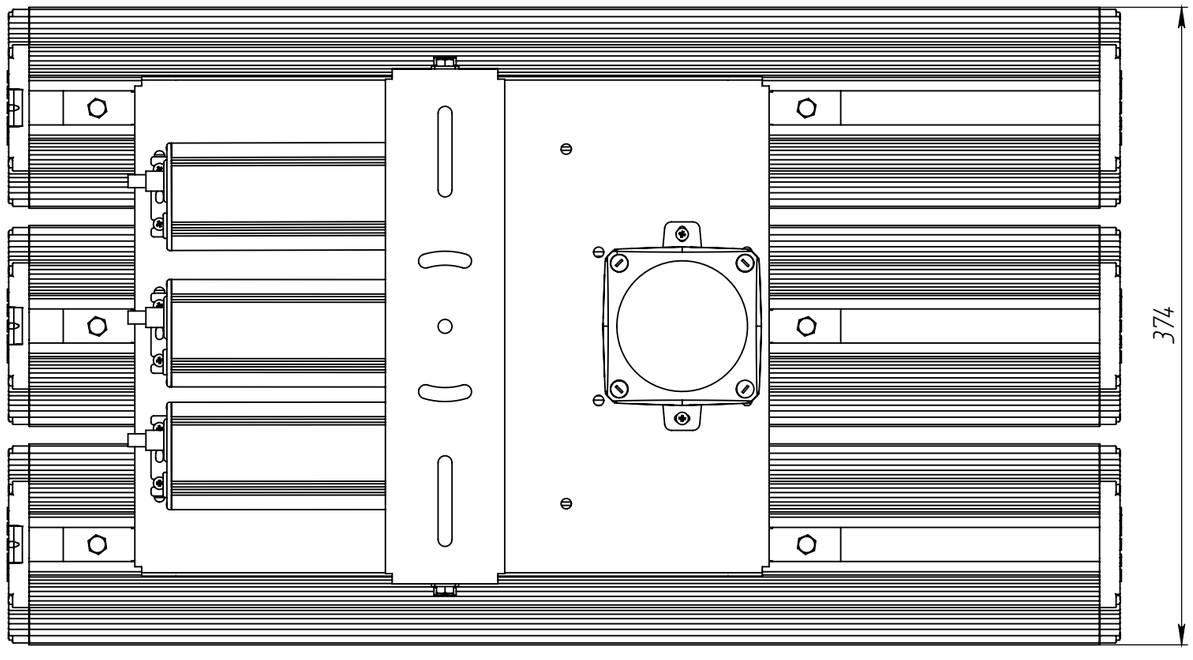
374